P/N BB-1-WB

Fig # 1

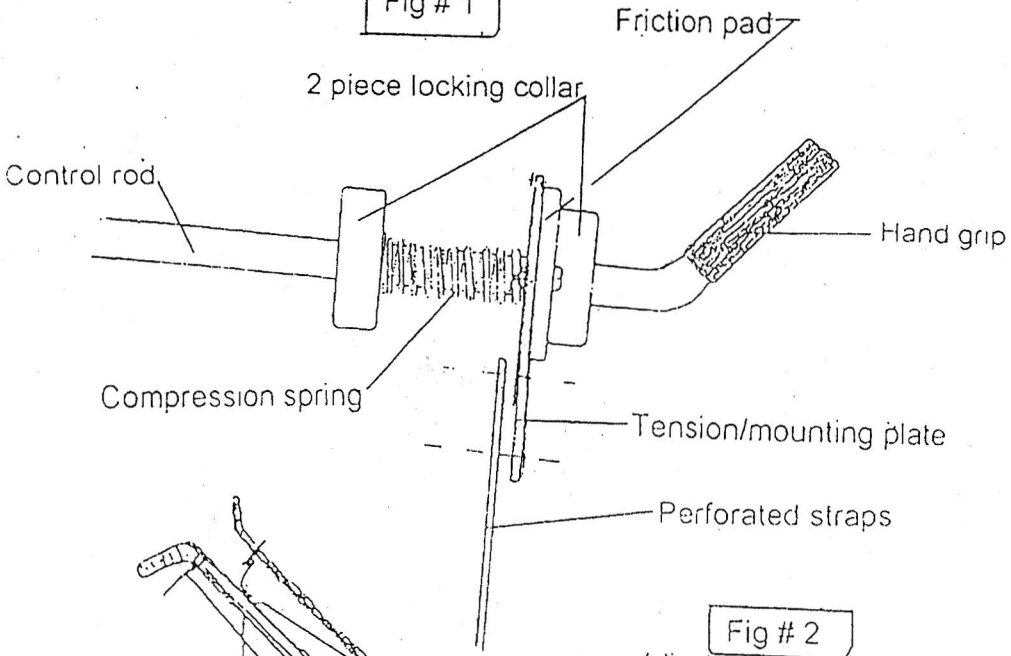

Fig # 2

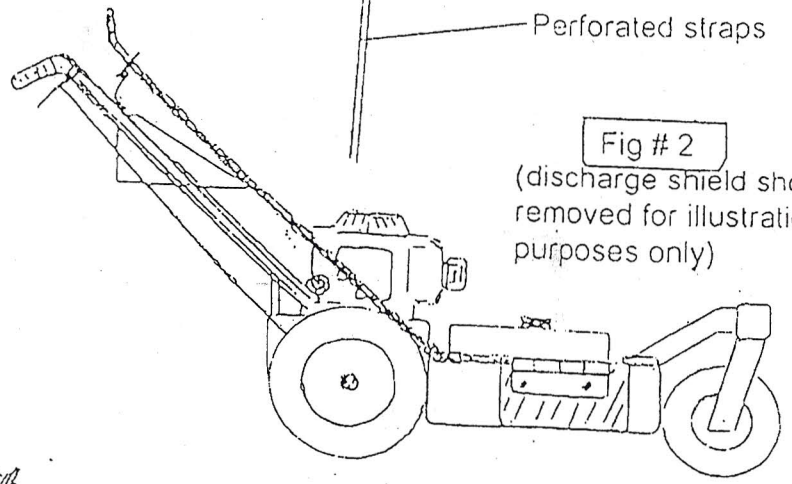

(discharge shield shown removed for illustration purposes only)

Fig # 3

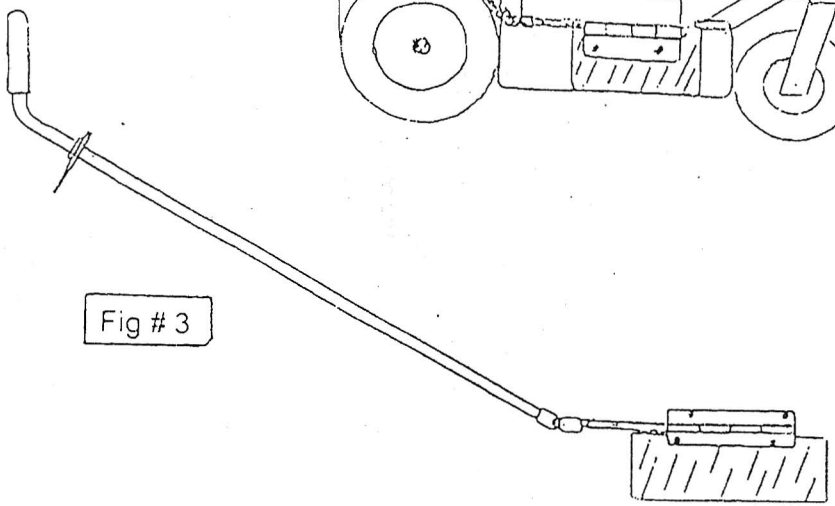

Fig # 6

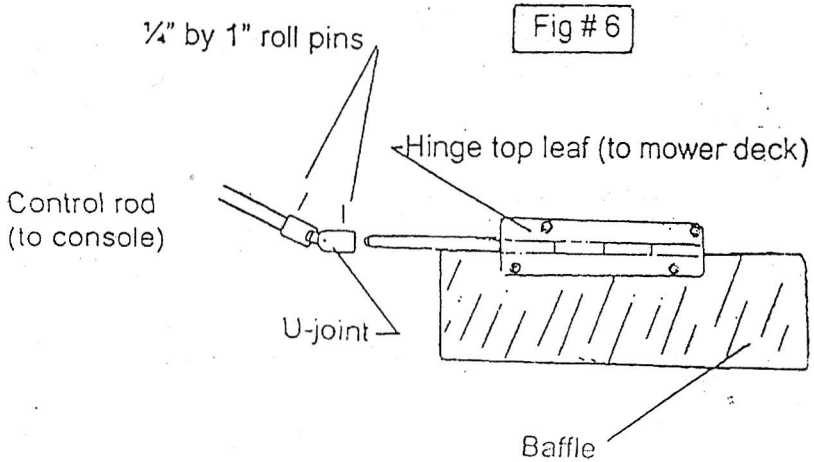

Fig # 5

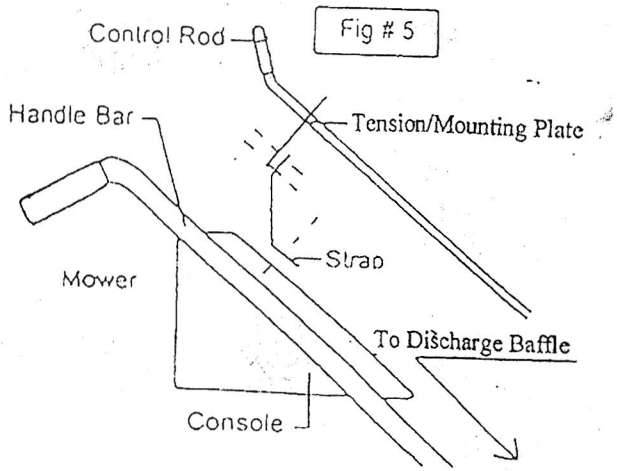
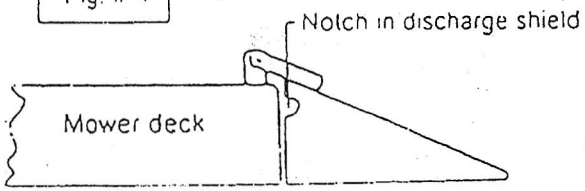
Fig. # 4